MATADOR®
SCHRAUBWERKZEUGE

0714 **Flat chisel, DIN 6453, shape A, 18x150 mm, MATADOR item no.: 07140150**

MATADOR® SCHRAUBWERKZEUGE

0714 Flat chisel, DIN 6453, shape A, 18x150 mm, MATADOR item no.: 07140150

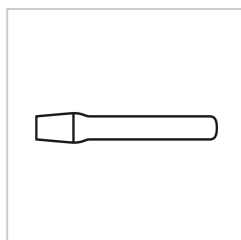

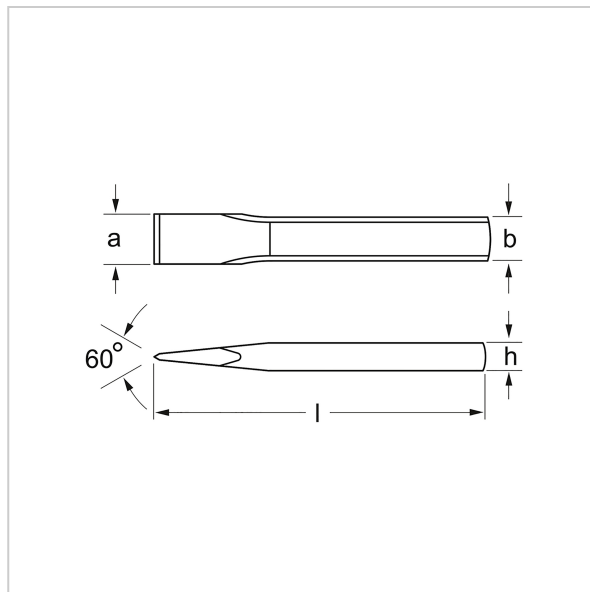

Beschreibung:

Flat chisels. For general and rough chiseling work on masonry, concrete or solid stone. With regrindable cutting edge 47-52 HRC. Hardened end of work. Very high strength due to special chrome-vanadium air hardener steel. Ideal for repairing soft materials. Inductively coated safety impact head. Polished work ends.

Technische Daten

Manufacturer-Number:	07140125M
Width:	18 mm
Height:	11 mm
Length:	125 mm
Weight:	0.15 kg