3083 **Enlargement piece, F 3/8" x M 1/2", MATADOR item no.: 30830001**



MATADOR GmbH & Co. KG
Morsbachtalstr. 17 | 42855 Remscheid | Deutschland | Tel. +49 (0)2191 97 43-0 | sales@matador.de | www.matador.de

3083 **Enlargement piece, F 3/8" x M 1/2", MATADOR item no.: 30830001**

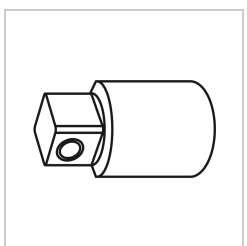

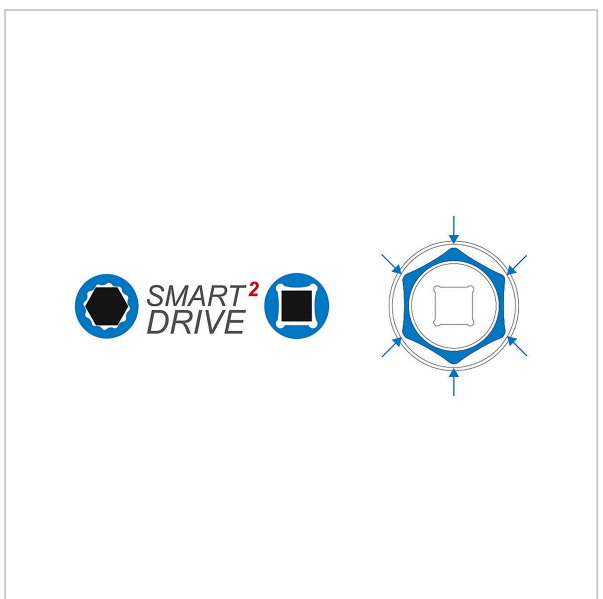

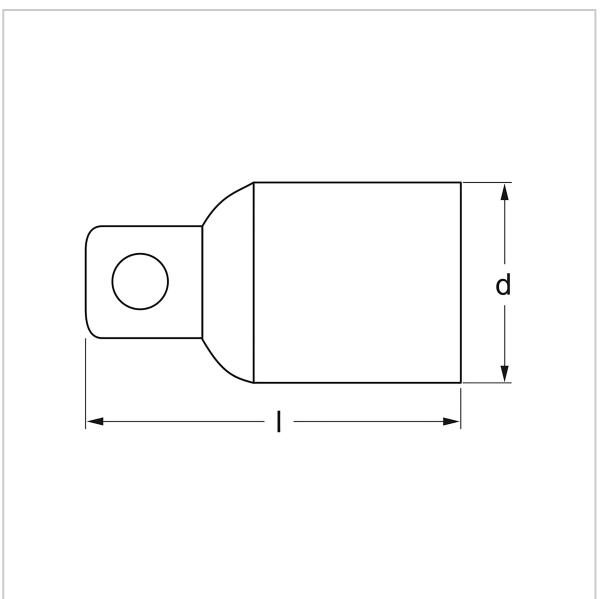

Beschreibung:

Magnifying piece. With ball lock. With grippy cross knurling. For manual operation with ratchet and connecting parts. Square according to DIN 3120, C 10 and A 12.5 / ISO 1174. With MATADOR Super chrome coating for finer surface finish and strong resistance to damage, scratches, etc.

Technische Daten

Manufacturer-Number:	3083 0001
EAN:	4040674133013
Width:	80 mm
Height:	18 mm
Length:	80 mm
Weight:	0.04 kg